# Running GPRS/EDGE Data Services with Osmocom

**Daniel Willmann** <dwillmann@sysmocom.de>

April 21, 2017

# Contents

GPRS structure

PCU

NITB

SGSN

GGSN

Running GPRS

# Classic GPRS

**Structure of a GSM network**

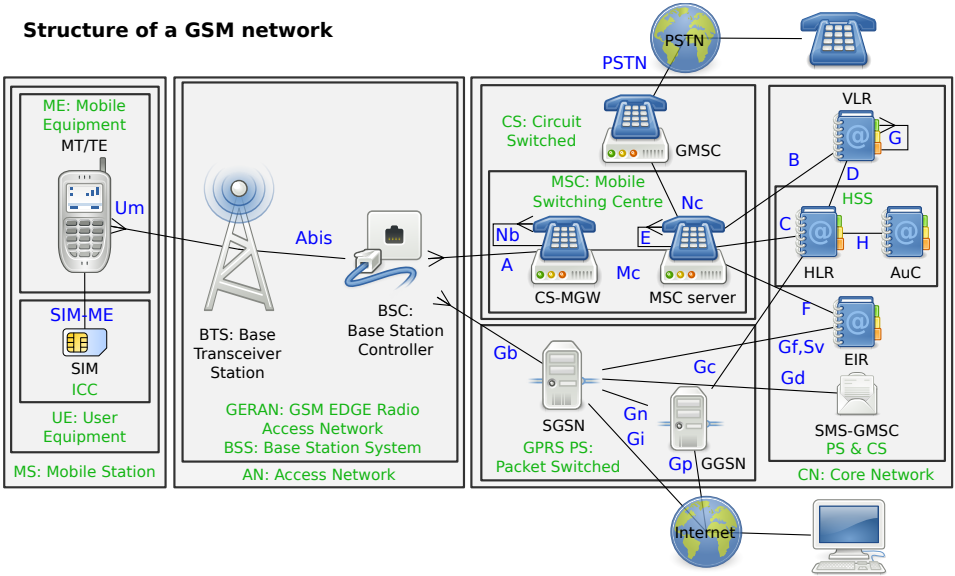

# Osmocom GPRS

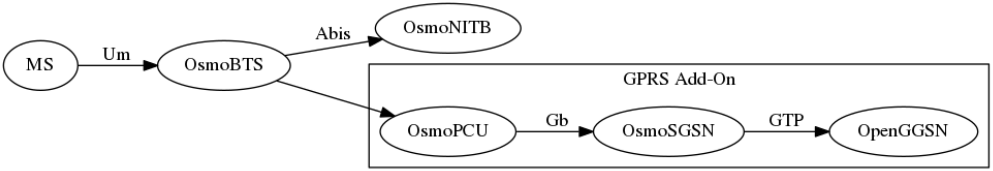


Configuration needed for:

- OsmoNITB
- OsmoPCU (located at BTS level)
- OsmoSGSN
- OpenGGSN

# GPRS configuration

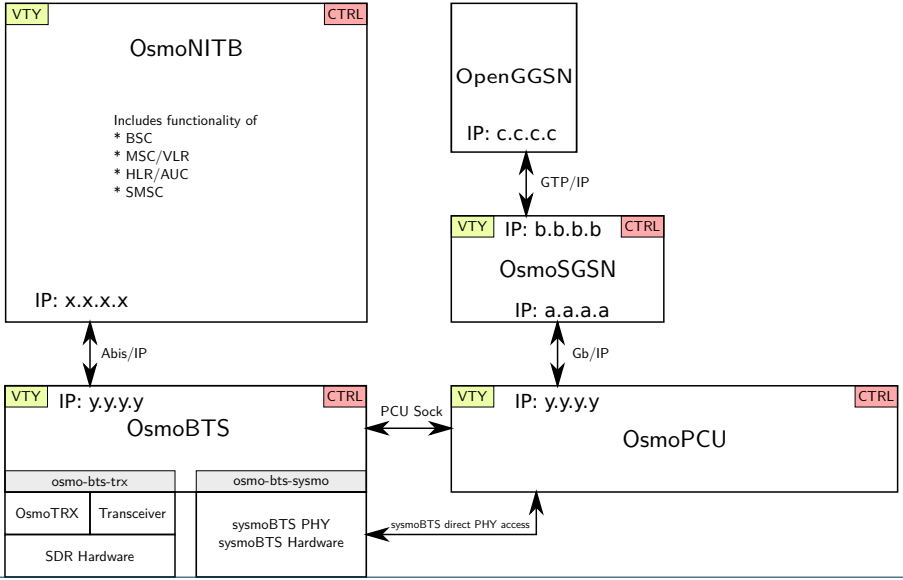

# GPRS configuration (PCU)

- Setup coding scheme (CS) and when to switch CS
- Throughput optimizations (flow control, TBF idle time)
- BSC/NITB configures the rest

```
pcu
 cs 2
 cs max 4
 cs threshold 50 80
 alloc-algorithm dynamic
 dl-tbf-idle-time 1000
```

# GPRS configuration (NITB)

```
network
 bts 0
  gprs mode gprs
  gprs routing area 1
  gprs cell bvci 1234
  gprs nsei 1234
  gprs nsvc 0 nsvci 1234
  gprs nsvc 0 local udp port 23001
  gprs nsvc 0 remote udp port 23000
  gprs nsvc 0 remote ip a.a.a.a
  trx 0
   timeslot 6
    phys_chan_config TCH/F_TCH/H_PDCH
   timeslot 7
    phys_chan_config PDCH
```

# GPRS configuration (SGSN)

```
sgsn
 gtp local-ip b.b.b.b
 ggsn 0 remote-ip c.c.c.c
 ggsn 0 gtp-version 1
 auth-policy closed
 imsi-acl add 12345678901234
!
ns
 encapsulation udp local-ip a.a.a.a
 encapsulation udp local-port 23000
 encapsulation framerelay-gre enabled 0
```

# GPRS configuration (SGSN)

```
sgsn
 gtp local-ip b.b.b.b
 ggsn 0 remote-ip c.c.c.c
 ggsn 0 gtp-version 1
 auth-policy closed
 imsi-acl add 12345678901234
!
ns
 encapsulation udp local-ip a.a.a.a
 encapsulation udp local-port 23000
 encapsulation framerelay-gre enabled 0
```

# GPRS configuration (SGSN)

- `auth-policy` can be `accept-all`, `closed`, `acl-only`, `remote`
- `auth-policy remote` for authorization and encryption with `osmo-hlr`

# GPRS configuration (GGSN)

```
listen c.c.c.c
net 10.23.42.0/24
pcodns1 8.8.8.8
```

# Miscellaneous

Don't forget masquerading/IP forwarding:

```
# echo 1 > /proc/sys/net/ipv4/ip_forward
# iptables -t nat -A POSTROUTING -o eth0 -j MASQUERADE
```

- Enable data roaming on your phone
- APN might need to be set manually

# Running it all

Demo

# Thank you

## Questions?

- https://osmocom.org/projects/cellular-infrastructure/wiki/OpenBSC_GPRS